# VOLUTE

RP-E-2305

Rakumba

WWW.RAKUMBA.COM
SALES@RAKUMBA.COM

ALL RIGHTS RESERVED © RAKUMBA, 2025

Rakumba

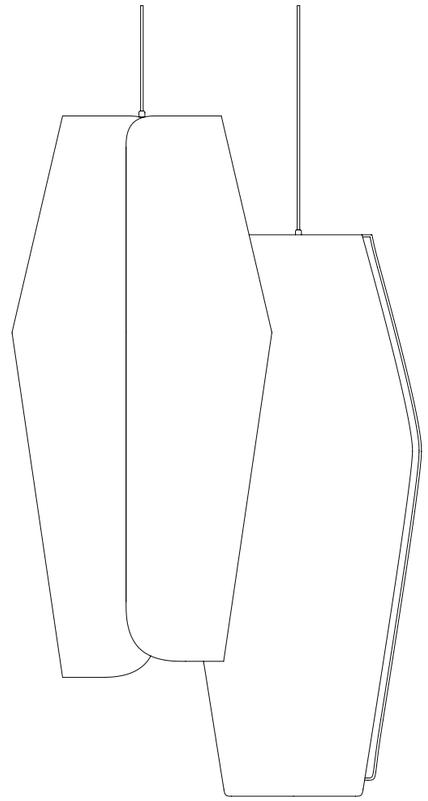

# VOLUTE

## RP-E-2305

Evoking scrolled natural forms - from botanical to nautical - designer Sebastian Herkner draws on Rakumba's heritage of textile lampshade craftmanship to create the Volute collection.

Herkner challenges skills honed over time with new lampshade geometries previously considered near impossible. Leveraging Rakumba's design ethos of "effortless complexity", Volute pushes craft to its limits, delivering distinguished contemporary presence with the softness of fabric.

With two shells of richly textured customisable fabrics embracing a warm glowing light, Volute is available in pendant, table and floor editions - with oversized pendant and floor lamps also available for outdoor settings.

# FINISHES - FABRIC INDOOR



PUTTY

FLAX

LINEN

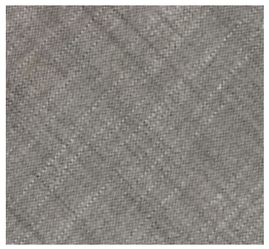

GRAPHITE

DICE

CUSTOM FABRIC

# FINISHES - FABRIC INDOOR/OUTDOOR

SAND

SEASALT

OYSTER



# FINISHES - BASE

AMERICAN ASH

AMERICAN ASH - BLACK

TUMBLED BRASS

TUMBLED ALUMINIUM

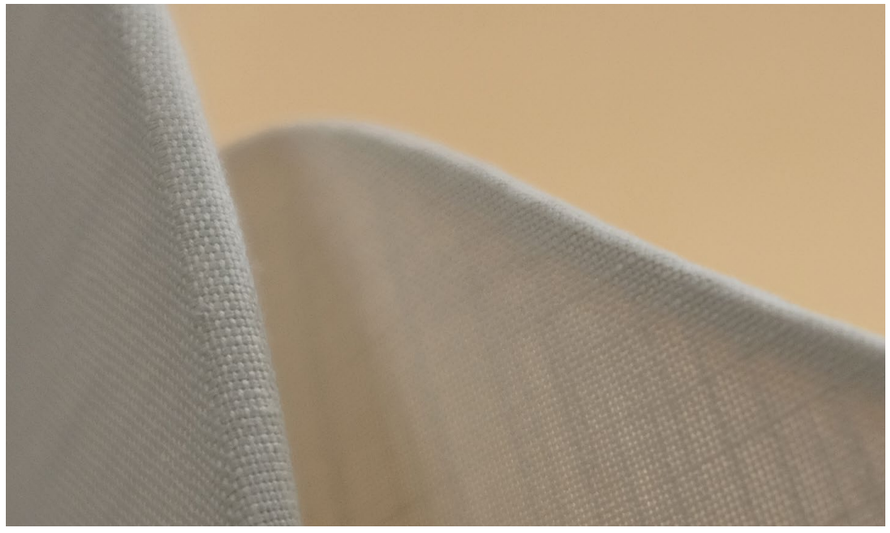

# MODELS

FLOOR XXL 1400
FLOOR XXL 1400 OUTDOOR*

FLOOR XL 900
FLOOR XL 900 OUTDOOR*

TABLE

PENDANT XXL 1400
PENDANT XXL 1400 OUTDOOR*

PENDANT XL 900
PENDANT XL 900 OUTDOOR*

PENDANT 450

*ONLY AVAILABLE IN OUTDOOR FABRIC FINISHES

# DIMENSIONS

## FLOOR XXL 1400 | FLOOR XXL 1400 OUTDOOR

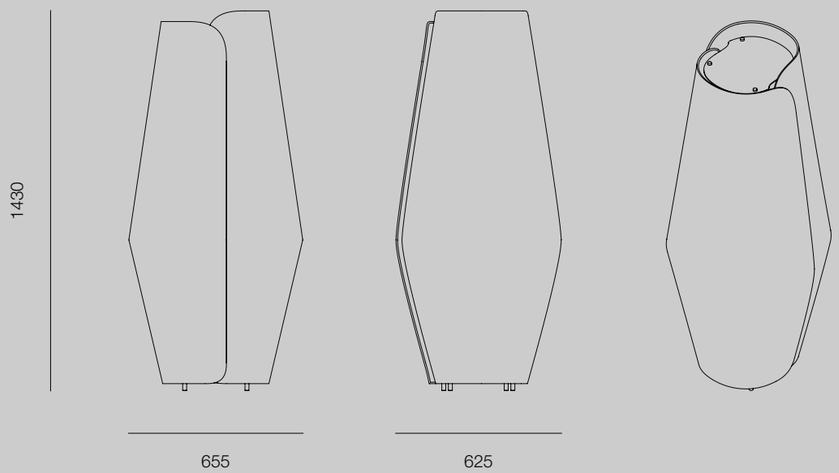


## FLOOR XL 900 | FLOOR XL 900 OUTDOOR

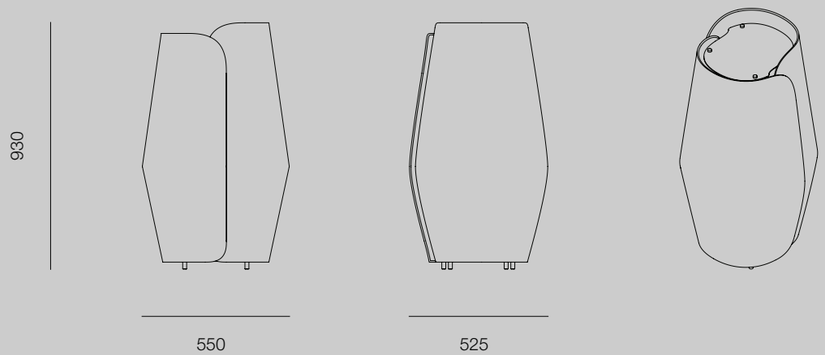


## TABLE

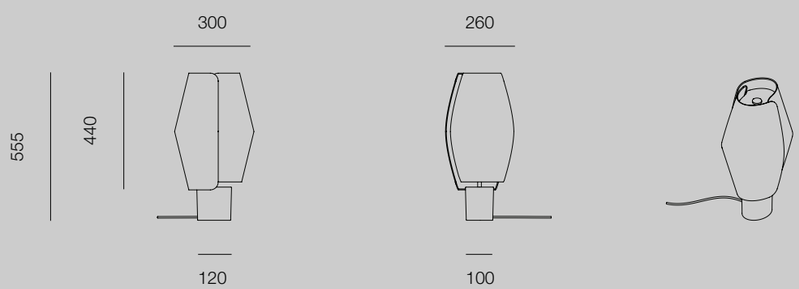


## PENDANT XXL 1400 | PENDANT XXL 1400 OUTDOOR

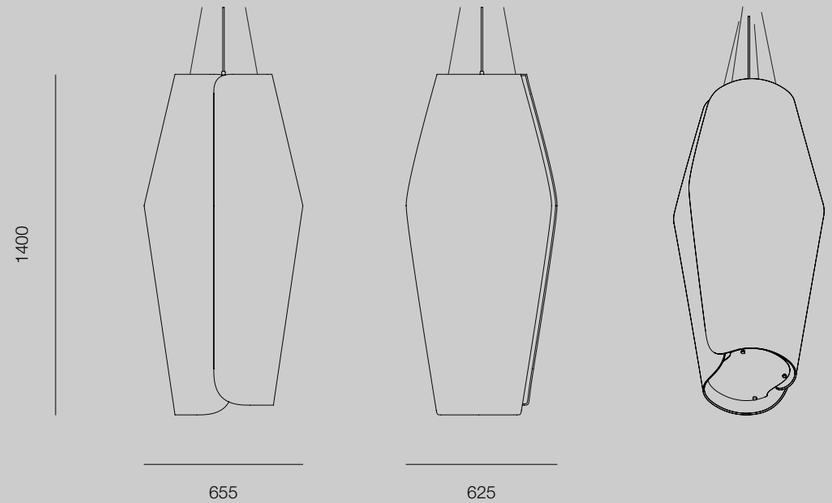


## PENDANT XL 900 | PENDANT XL 900 OUTDOOR

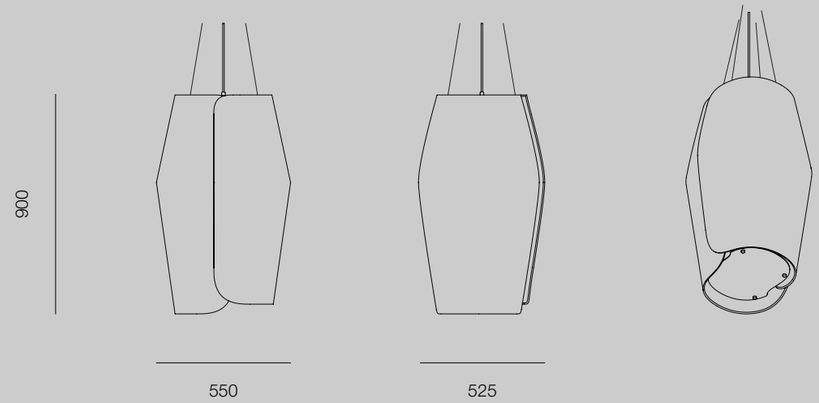


## PENDANT 450

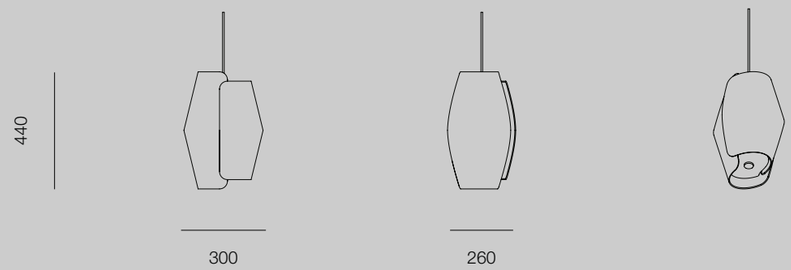


ALL DIMENSIONS IN MILLIMETRES

# OPTIONS

| | | | | |
|---|---|---|---|---|
| MODEL: | O | FLOOR XXL 1400 | O | PENDANT XXL 1400 |
| | O | FLOOR XXL 1400 OUTDOOR | O | PENDANT XXL 1400 OUTDOOR |
| | O | FLOOR XL 900 | O | PENDANT XL 900 |
| | O | FLOOR XL 900 OUTDOOR | O | PENDANT XL 900 OUTDOOR |
| | O | TABLE | O | PENDANT 450 |
| FINISH - INDOOR FABRIC: | O | PUTTY | O | FLAX |
| | O | LINEN | O | DICE |
| | O | GRAPHITE | | |
| FINISH - INDOOR & OUTDOOR FABRIC: | O | SAND | O | SEASALT |
| | O | OYSTER | | |
| FINISH - BASE: | O | AMERICAN ASH | O | TUMBLED BRASS |
| | O | AMERICAN ASH - BLACK | O | TUMBLED ALUMINIUM |
| SUSPENSION OPTIONS: | O | 2M | O | CUSTOM |
| | O | 5M | | |
| FLEX OPTIONS: | O | BLACK BRAIDED | O | WHITE BRAIDED |
| SEAMLESS CANOPY: | O | BLACK 80MM* | O | WHITE XL 150MM SLIMLINE |
| | O | WHITE 80MM | O | BLACK XL 150MM SLIMLINE |
| | O | BRASS 80MM | | |

*DEFAULT

# DATA

| RP-E-2305 | FLOOR XXL 1400 | FLOOR XL 900 | FLOOR XXL 1400 OUTDOOR | FLOOR XL 900 OUTDOOR | TABLE | PENDANT XXL 1400 | PENDANT XL 900 | PENDANT XXL 1400 OUTDOOR | PENDANT XL 900 OUTDOOR | PENDANT 450 |
|---|---|---|---|---|---|---|---|---|---|---|
| LIGHTSOURCE | E27* | | | | | | | | | |
| POWER | MAX 24W | | | | | | | | | |
| PRIMARY VOLTAGE | 240VAC | | | | | | | | | |
| IP RATING | IP20 | | IP68 | | IP20 | | | IP68 | | IP20 |
| APPROVALS | AUSTRALIA, NEW ZEALAND, EUROPE (PENDING) | | | | | | | | | |

*GLOBES NOT SUPPLIED - LED GLOBE RECOMMENDED

# SEBASTIAN HERKNER

Sebastian Herkner established his studio in Offenbach, Germany in 2006. Since then, he has designed furniture, lighting and products for brands all around the world. Sebastian's design ethos is driven by quality and function as well as tradition and innovation. His designs are personal, developed using intuition and instinct, working with brands who share his vision and responsibility for products.

Named Elle Deco International Design Award (EDIDA) Designer of the Year 2021 and Maison & Objet Designer of the Year 2019, Sebastian's works have won numerous accolades internationally.

Rakumba is the first Australian brand collaboration for Sebastian. Despite operating on opposite sides of the globe, the collaboration with Rakumba's product development team has been close and intense, continuing Rakumba's international design legacy and yielding results that speak for themselves.